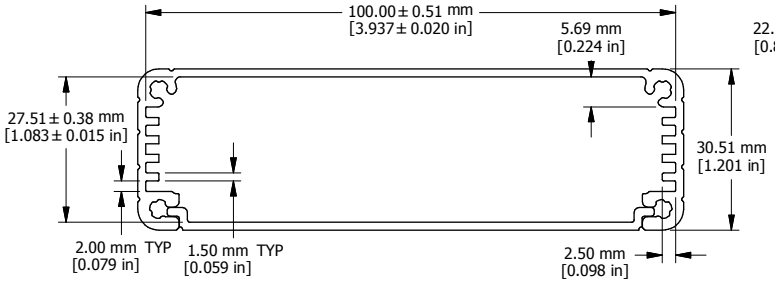

EXTRUSION

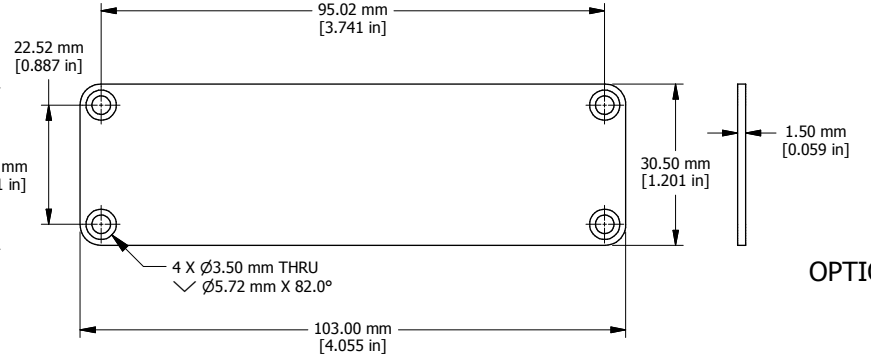

END PLATE

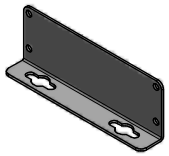

OPTIONAL FLANGE END PANELS
1455LF

EXTRUSION DESIGNED FOR 100MM WIDE PC BOARD

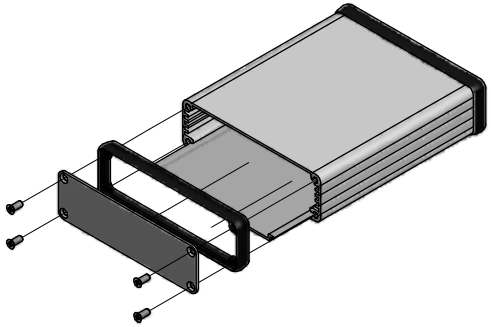

EXPLODED ASSEMBLY VIEW

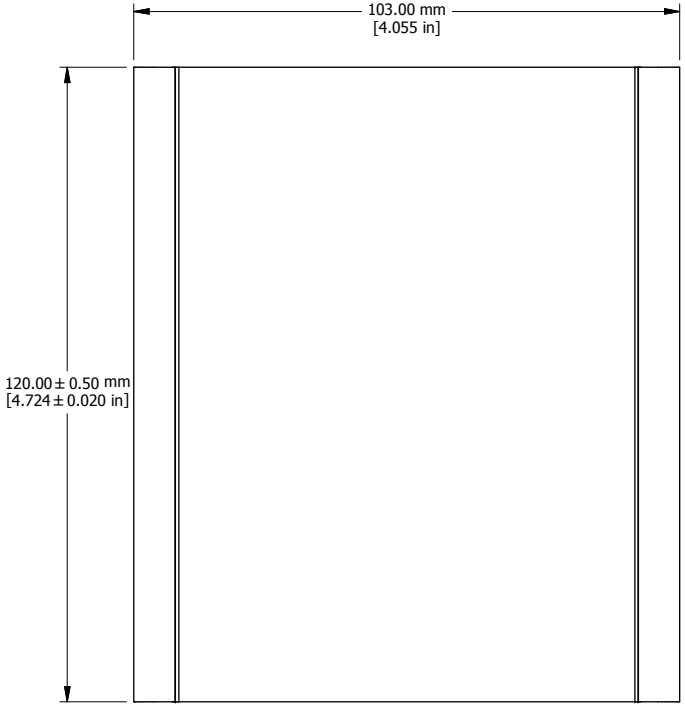

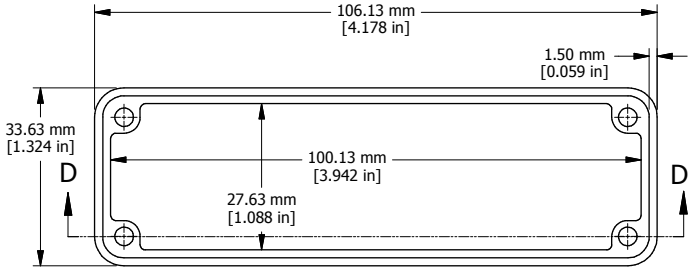

OPEN BEZEL

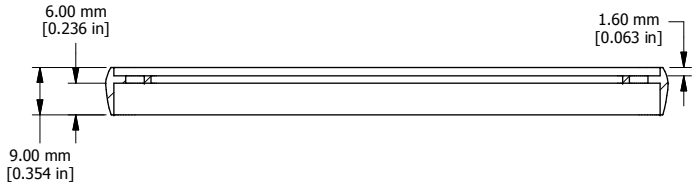

Enclosures can be Factory Modified (Milling, Drilling, Printing etc.)
Solid models of this enclosure available in STEP or IGES.
Contact Factory mjm@hammondmfg.com

NOTE
Purchased assembly includes box, plastic bezels, end panels, #6 Taptight screws and self adhesive rubber feet.
Box made from Extruded Aluminum 6063.
Bezels made with polycarbonate.

1455L1201	
PART NUMBERS	
Clear Anodized	1455L1201
Black Anodized	1455L1201BK
Blue Anodized	1455L1201BU
Red Anodized	1455L1201RD
ACCESSORIES	
See website for accessories.	

HAMMOND MANUFACTURING™

1455L1201

www.hammondmfg.com