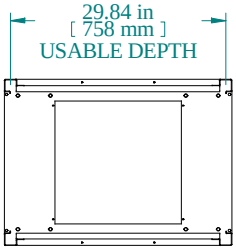

SECTION A-A

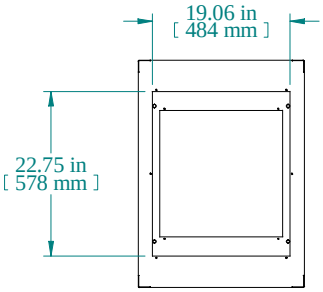

TOP VIEW

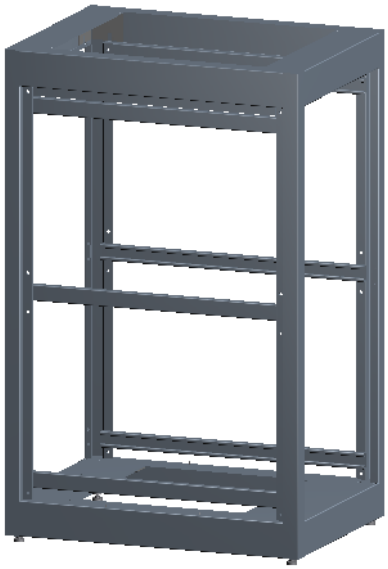

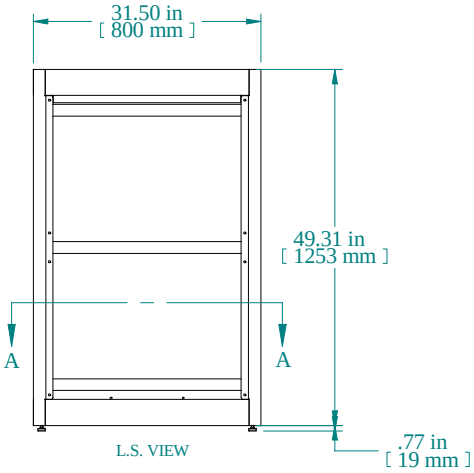

L.S. VIEW

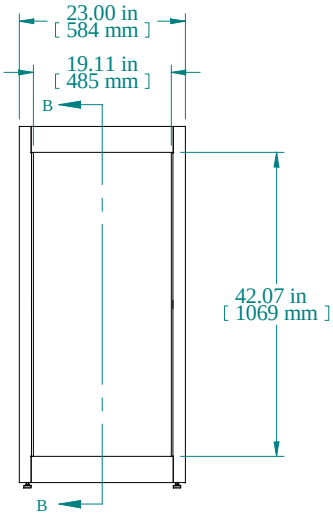

FRONT VIEW

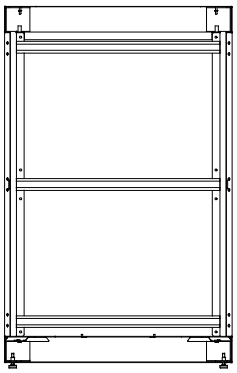

SECTION B-B

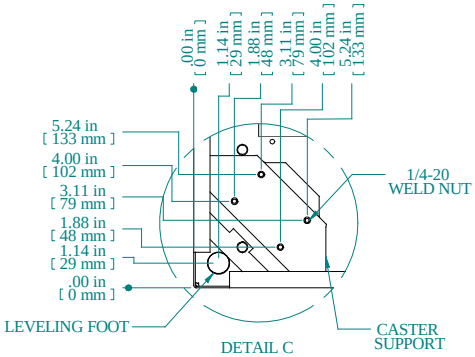

DETAIL C
3:1

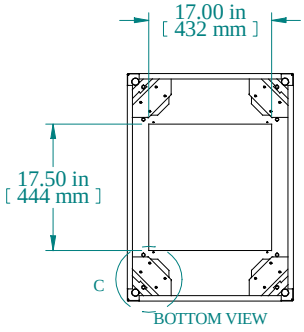

BOTTOM VIEW

PART NUMBERS	
C2F194231BK1	PAINTED BLACK TEXTURED
C2F194231CG1	PAINTED CONT. GRAY TEXTURED
C2F194231LG1	PAINTED RAL7035 TEXTURED
NOTES	
Welded Assembly See Hammond Website for Frame Accessories	

Data subject to change without notice. Isometric drawing not to scale.

HAMMOND MANUFACTURING™

www.hammondmfg.com

PART NO. C2F194231