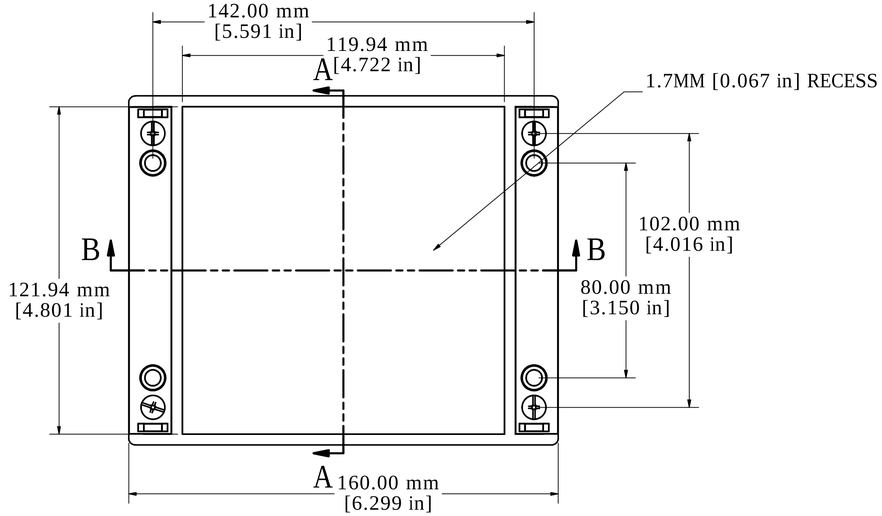

ASSEMBLY - TOP VIEW

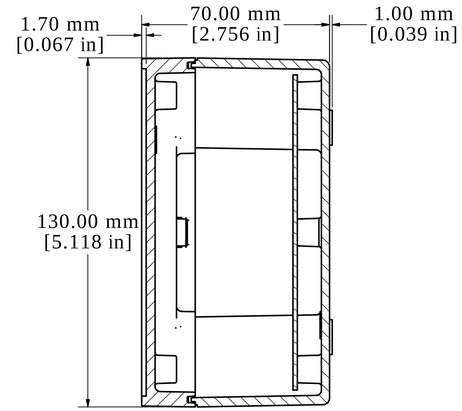

SECTION A-A

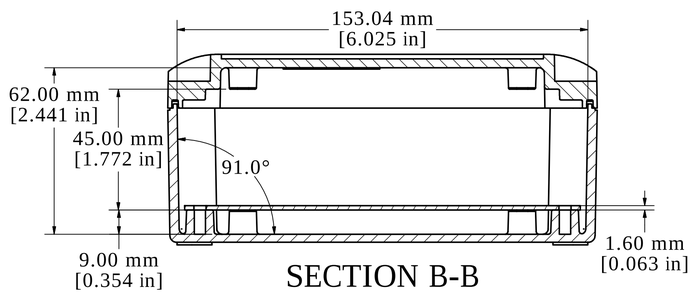

SECTION B-B

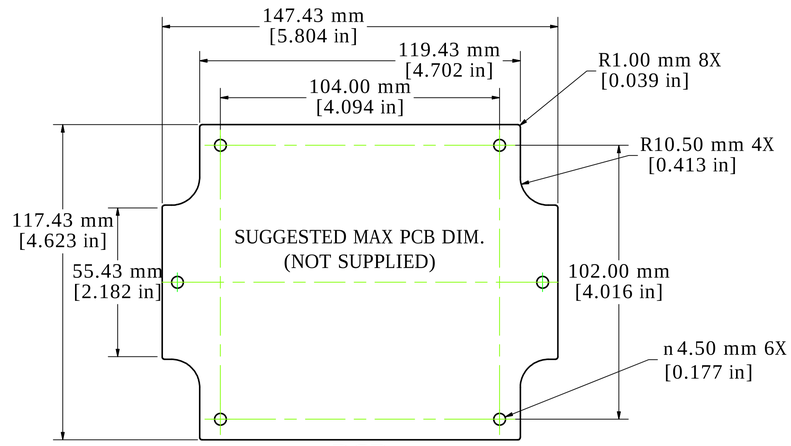

PCB

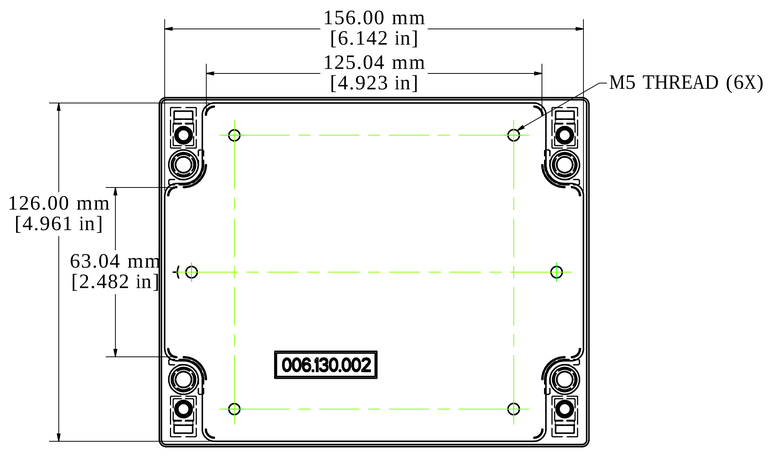

BOX - INSIDE VIEW

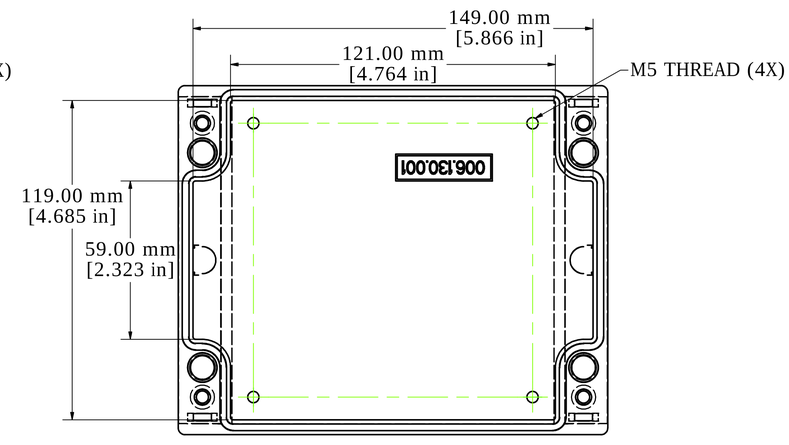

LID - INSIDE VIEW

Enclosures can be Factory Modified (Milling, Drilling, Printing etc.)
Contact Factory mjm@hammondmfg.com for quotes
Solid models of this enclosure available in STEP or IGES.

NOTE
Purchased Assembly includes:
Top and Bottom Cover (Die-cast aluminum G Al Si 12 / DIN 1725)
4 Captive Stainless Steel Screws.
Standard Powder Coated (Silky Grey RAL 7040)
POM Design Covers
Integrated Lid Support

HAMMOND MANUFACTURING™

R190-130-000

www.hammondmfg.com